XpressChef™

By MENUMASTER® Commercial

HIGH SPEED OVENS

HIGH SPEED OVENS 快速烤箱

XpressChef™ By MENUMASTER Commercial

Faster. Safer. Smarter.
更快. 更安全. 更聪明.

Power and speed for all your baking, toasting, and crisping needs.
不同功率, 不同速度, 满足您所有焗烤, 烘烤和酥脆的需求。

A diverse product line of high speed ovens, offering a variety of footprints, capacities, and cooking technologies. Discover the perfect high-speed oven for your operation.
探索适合您操作的完美高速烤箱。多样化的产品线, 提供各种占地面积, 容量和烹饪技术。

NEW!

XpressChef™ 2c Series 系列

Cooking Technologies 烹饪技术
- Convection 对流
- Microwave Assist 微波

Ventless cooking standard
无需排气烹饪标准
- Certified for ventless 通过无烟罩排气认证

Touchpad controls
触控控制屏

Connectivity Standard 标配连接

4-10x faster than conventional ovens
速度比对流烤箱快 4-10 倍
- Frozen 30cm (12") pizza bakes in:
  30cm (12") 冷冻披萨只需:
  - 3:45 (1900W unit 型号)
  - 5:00 (1400W unit 型号)

NEW!

XpressChef™ 3i Series 系列

Cooking Technologies 烹饪技术
- Impingement 冲击气流
- Convection 对流
- Microwave Assist 微波

Ventless cooking standard
无需排气烹饪标准
- Certified for ventless 通过无烟罩排气认证

True-Touch™ HD Touchscreen
高清触控显示屏

Connectivity Standard 标配连接

15x faster than conventional ovens
速度比对流烤箱快 15 倍
- Frozen 30cm (12") pizza bakes in:
  30cm (12") 冷冻披萨只需:
  - 2:50 (2000W unit 型号)
  - 3:10 (1000W unit 型号)

NEW!

XpressChef™ 4i Series 系列

Cooking Technologies 烹饪技术
- Impingement 冲击气流
- Convection 对流
- Microwave Assist 微波
- Infra-red radiant 红外幅射

Ventless cooking standard
无需排气烹饪标准
- Certified for ventless 通过无烟罩排气认证

True-Touch™ HD Touchscreen
高清触控显示屏

Connectivity Standard 标配连接

15x faster than conventional ovens
速度比对流烤箱快 15 倍
- Frozen 30cm (12") pizza bakes in 2:50
  30cm (12") 冷冻披萨只需 2:50

- Accelerate cook times while maintaining food integrity & quality
- Combine 2 or more heating technologies including microwave 'assist'
- Produce outstanding results across a broad range of menu items
- World-class Comserv™ Service and ACP Culinary Support
- Best-in-Class remote menu management software - Mac/PC
- Maximum cavity to reduced footprint ratio
- The speed cooking innovation and expertise of ACP
- USB updates
- Power levels (11)
- Stages (4)
- Stainless inside & out
- Removable air filters
- Available ventless

- 加快烹饪时间，同时保持食物的完整性和品质
- 组合使用2种或以上加热技术，包括微波'辅助'
- 对各种食物都能保持卓越的出品
- 中国地区提供烹饪专业技术支持
- 提供优质的远程菜单管理软件 - Mac/PC系统均适用
- 炉腔空间大，占地面积少
- 对快速烹饪创新技术的追求源于美国ACP公司的专业
- 使用USB程序更新
- 十一级微波火力设定
- 四阶段烹饪程序设定
- 不锈钢外壳和内胆，卫生安全
- 可拆卸空气过滤网，方便清洁
- 无需排烟罩，适合前场使用

XpressChef™ 2c Series 系列

HIGH SPEED COMBINATION OVEN 热风对流微波烤箱

Models:

JET514 -	HK, Asia 香港, 亚洲	2700W Convection对流 + 1400W Microwave 微波, Single Phase 单相
JET514V -	HK, Asia 香港, 亚洲	2700W Convection对流 + 1400W Microwave 微波, Single Phase 单相, Ventless 无需排气
JET514C -	China 中国	2700W Convection对流 + 1400W Microwave 微波, Single Phase 单相
JET514VC -	China 中国	2700W Convection对流 + 1400W Microwave 微波, Single Phase 单相, Ventless 无需排气
JET14 -	Philippines 菲律宾	2700W Convection对流 + 1400W Microwave 微波, Single Phase 单相
JET14VT -	Taiwan, Philippines 台湾, 菲律宾	2700W Convection对流 + 1400W Microwave 微波, Three Phase 三相, Ventless 无需排气

Combines 2 cooking energies
完美结合 2 种加热技术

Convection
对流

Microwave Assist
微波

Flexible cooking platform
灵活的烹饪平台

- Use any combination of convection and microwave energy
  任意组合对流和微波能量的任意组合和微波的热能
- Cooks a variety of menu items effortlessly
  轻松烹饪各种菜单

Convection
对流热风

- 2700W
- 65°-250°C (150°-475°F) temperature range 温度范围
- Enhances toasting and browning 增强烘烤和上色效果

Microwave Assist
微波辅助

- 1400W
- Top antenna feed 顶部天线

Versatility and Speed in an entry level Speed Oven
入门级多功能高速烤箱

Affordable encomic price - Excellent ROI
经济实惠的价格 - 出色的投资回报率

- Bakes 4-10 times faster than conventional ovens
  比传统烤箱快4-10倍
- Stackable to increase throughout and save valuable counter space
  可堆叠, 产量增大, 却可节约昂贵的柜台空间
- Compact footprint fits on 27.5" (70cm) deep counter
  机身紧凑, 仅需27.5" (70 cm) 深的柜台空间

The secret to our success? Has to be the first-cooked quality and taste of our food. Most of the items on our menu are pre-cooked but with the JET - everything tastes "fresh out of the oven"!
我们成功的秘诀是什么？必须是新鲜烹制的食物质量和味道。我们菜单上大部份菜品都是预先煮熟的，但使用JET - 一切都是 "刚出炉" 的味道!

It regenerates beautifully - like it was just cooked
令食物再生得漂亮就像刚煮熟一样

- Accommodates 30 cm (12") pizza
  可容纳 30cm (12") 的披萨

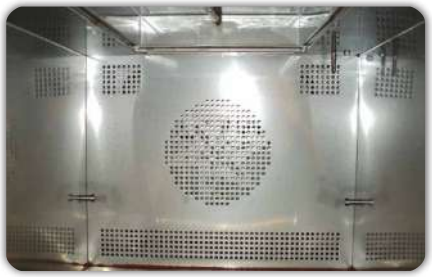

- Improved convection airflow, addition of perforations along back of cavity and removal of heat tubes
  腔内增加背部透气孔和除去热管, 改善空气对流交替
- Creates more usable cavity space
  为炉腔内创建更多的可用空间
- Enhances browning and toasting capabilities
  增强褐变上色和烘烤功能
- Easier to clean
  易于清洗

ACP Menumaster managment
ACP Menumaster管理

USB Connectivity Standard
USB标准连接

- Update programming in seconds with USB flash drive
  使用USB闪存可迅速更新菜单程序

ACP Programming Application (Web App)
ACP编程应用

- Updates menu programs in seconds
  快速更新菜单程序

Easy to operate
易于操作

Lift and Pull Handle
握住手柄后拉即可开启

Easy-to-understand control panel icons
简单易操作的控制面板

Provides easy "one-touch" cooking
可一键烹饪

Stores up to 100 menu items
预设和存储超过100个菜单选项

Easy to remove Air filter
磁性可拆卸空气过滤网

Removable, cleanable air filter and clean filter reminder protect oven components.
可拆卸和清洁的空气过滤网, 带滤网清洁提醒, 防止烤箱元件受损。

'V' models available with catalytic converters, which filter grease and odors from the air. No need for costly ventilation hood.
可选配带触媒转化器的 V 型号, 可过滤空气中的油脂和气味, 无需通风罩

COOKING GUIDES 烹饪指南

XpressChef™ 2c Series HIGH SPEED COMBINATION OVEN 热风对流微波烤箱

XpressChef™ 2c SERIES 系列

Combines 2 cooking energies
完美结合2种加热技术

Convection
对流

Microwave Assist
微波

TOTILLA JAPANESE CURRY CHICKEN PIZZA (Pre-cooked)
脆饼披萨 (已煮熟)

Food Temp. 食物温度: 4°C
Accessories used 使用配件: Pizza Stone 披萨石板

Regeneration program 回温程序

			MW
240°C	1	0:30	100%
	2	0:30	80%
	3	0:30	30%

Holding: Fridge at 4°C
储存: 4°C 冷藏

Cooking: Stuffing and cheese on the tortilla, grill in XpressChef™ 2c
烹调: 墨西哥饼上放馅料和芝士, 放入 XpressChef™ 2c 烤焗

GRILLED SALMON STEAK (Raw food)
烤三文鱼扒 (生的食物)

Food Temp. 食物温度: 4°C
Accessories used 使用配件: Panini Grill Plate 坑烤盘

Regeneration program 回温程序

			MW
240°C	1	0:40	100%
	2	0:20	50%
	3	0:30	30%

Holding: Fridge at 4°C
储存: 4°C 冷藏

Cooking: Grill in XpressChef™ 2c from raw
烹调: 放入 XpressChef™ 2c 从生烤焗

OKONOMIYAKI (Raw food)
大阪烧 (生的食物)

Food Temp. 食物温度: 4°C
Accessories used 使用配件: Panini Grill Plate Smooth Side 坑烤盘平滑面

Regeneration program 回温程序

			MW
240°C	1	0:40	80%
	2	0:10	70%
	3	0:10	60%
	4	0:60	10%

Holding: Fridge at 4°C
储存: 4°C 冷藏

Cooking: Mixed the ingredients and grill in XpressChef™ 2c
烹调: 原材料混合均匀后, 放入 XpressChef™ 2c 烤焗

GRILLED PRAWN (Raw food)
烤虾 (生的食物)

Food Temp. 食物温度: 4°C
Accessories used 使用配件: Panini Grill Plate Smooth Side 坑烤盘平滑面

Regeneration program 回温程序

			MW
240°C	1	0:20	50%
	2	0:30	10%
	3	1:30	0%

Holding: Fridge at 4°C
储存: 4°C 冷藏

Cooking: After marinating, grill in XpressChef™ 2c from raw
烹调: 腌制后, 放入 XpressChef™ 2c 从生烤熟

BANANA LEAF WRAPPED AMBAL FISH (Raw Food)
烤桑巴鱼 (生的食物)

Food Temp. 食物温度: 4°C
Accessories used 使用配件: Panini Grill Plate Smooth Side 坑烤盘平滑面

Regeneration program 回温程序

			MW
240°C	1	2:00	80%
	2	1:00	20%

Holding: Fridge at 4°C
储存: 4°C 冷藏

Cooking: Dory fish (80gm) after marinating, wrapped in banana leaf, then grill in XpressChef™ 2c
烹调: 腌制多莉鱼 (80克)后, 用香蕉叶包裹, 放入 XpressChef™ 2c 从生烤熟

CHICKEN YAKITORI STICKS (Pre-cooked)
烤鸡肉串 (已煮熟)

Food Temp. 食物温度: 4°C
Accessories used 使用配件: Panini Grill Plate 坑烤盘

Regeneration program 回温程序

			MW
240°C	1	1:00	100%
	2	1:00	60%
	3	1:00	0%

Holding: Fridge at -18°C
储存: -18°C 冷冻

Cooking: Thaw in fridge at 4°C, then grill in XpressChef™ 2c
烹调: 放在 4°C 冰箱解冻, 放入 XpressChef™ 2c 烤焗

NASI LEMAK CANAPE (Pre-cooked)
椰浆饭 (已煮熟)

Food Temp. 食物温度: 4°C
Accessories used 使用配件: Panini Grill Plate Smooth Side 坑烤盘平滑面

Regeneration program 回温程序

			MW
240°C	1	0:50	40%
	2	0:30	80%
	3	0:30	0%

Holding: Fridge at 4°C
储存: 4°C 冷藏

Defrost and Cooking: Thaw in fridge at 4°C, then grill in XpressChef™ 2c
解冻和烹调: 放在 4°C 冰箱解冻, 放入 XpressChef™ 2c 烤焗

ONION RING (Pre-cooked)
洋葱圈 (已煮熟)

Food Temp. 食物温度: 4°C
Accessories used 使用配件: Panini Grill Plate Smooth Side 坑烤盘平滑面

Regeneration program 回温程序

			MW
240°C	1	0:30	40%
	2	2:30	0%

Holding: Fridge at -18°C
储存: -18°C 冷冻

Defrost and Cooking: Thaw in fridge at 4°C, then grill in XpressChef™ 2c
解冻和烹调: 放在 4°C 冰箱解冻, 放入 XpressChef™ 2c 烤焗

BAKED SEAFOOD SOUP WITH PUFF PASTRY (Raw food)
焗酥皮海鲜汤 (生的食物)

Food Temp. 食物温度: 5°C
Accessories used 使用配件: Iron pan and porcelain bake safe bowl
铁盘和耐高温陶瓷汤碗

Regeneration program 回温程序

			MW
250°C	1	1:00	50%
	2	2:15	0%

Holding: Frozen Dough freeze at -18°C
储存: 冷冻面团保存在 -18°C 冷冻冰箱

Defrost and Cooking: Defrost at room temperature to 5°C, bake in XpressChef™ 2c
解冻和烹调: 放在室温解冻到 5°C, 在 XpressChef™ 2c 烤焗

BAKED PORK CHOP RICE (Pre-cooked)
焗猪扒饭 (已煮熟)

Food Temp. 食物温度: 4°C
Accessories used 使用配件: Iron pan and porcelain bake safe bowl
铁盘和耐高温陶瓷盘

Regeneration program 回温程序

			MW
250°C	1	1:15	50%
	2	5:00	10%

Preparation and Cooking: Lay fried rice on the bottom, put the fried pork chop on top on the rice and cover with tomato sauce. Sprinkle cheddar cheese and grill in XpressChef™ 2c.
准备和烹调: 将炒饭放在底部, 将炸猪排放在米饭上, 然后盖上蕃茄酱, 撒上切达干酪, 放进 XpressChef™ 2c 烤焗

BAKED SWEET CORN (Raw food)
烤玉米 (生的食物)

Food Temp. 食物温度: 4°C
Accessories used 使用配件: Panini Grill Plate Smooth Side 坑烤盘平滑面

Regeneration program 回温程序

			MW
240°C	1	0:10	100%
	2	1:00	0%

Holding: Room temperature
储存: 室温

Cooking: After stringing, grill in XpressChef™ 2c
烹调: 造型后, 放入 XpressChef™ 2c 烤焗

EGG ROLL WITH MOZZARELLA CHEESE (Pre-cooked)
日式蛋卷 (已煮熟)

Food Temp. 食物温度: 4°C
Accessories used 使用配件: Panini Grill Plate Smooth Side 坑烤盘平滑面

Regeneration program 回温程序

			MW
240°C	1	0:20	70%
	2	0:20	10%
	3	1:00	0%

Holding: Fridge at 4°C
储存: 4°C 冷藏

Cooking: Cook egg with layers of cheese like an omelette, then refrigerate, take it out from the refrigerator and grill in XpressChef™ 2c
烹调: 煮熟后冷藏, 放入 XpressChef™ 2c 烤焗

GRILLED CHICKEN BREAST (Pre-cooked)
烤鸡胸肉 (已煮熟)

Food Temp. 食物温度: 4°C
Accessories used 使用配件: Panini Grill Plate 坑烤盘

Regeneration program 回温程序

			MW
250°C	1	1:00	50%
	2	2:15	0%

Holding: Fridge at 4°C
储存: 4°C 冷藏

Cooking: Seal and cook at sous vide, then refrigerate, take it out from the refrigerator, grill in XpressChef™ 2c
烹调: 密封低温慢煮, 然后冷藏, 再从冰箱取出放入 XpressChef™ 2c 烤焗

MINI GRILLED ASSORTED SAUSAGES (Pre-cooked)
什锦香肠 (已煮熟)

Food Temp. 食物温度: 4°C
Accessories used 使用配件: Panini Grill Plate Smooth Side 坑烤盘平滑面

Regeneration program 回温程序

			MW
240°C	1	0:15	70%
	2	0:20	20%
	3	0:30	10%

Holding: Fridge at -18°C
储存: -18°C 冷冻

Cooking: Thaw in fridge at 4°C, then grill in XpressChef™ 2c
烹调: 放在 4°C 冰箱解冻, 放入 XpressChef™ 2c 烤焗

HAM WITH BURRITO (Pre-cooked)
火腿莎莎卷 (已煮熟)

Food Temp. 食物温度: 4°C
Accessories used 使用配件: Panini Grill Plate Smooth Side 坑烤盘平滑面

Regeneration program 回温程序

			MW
240°C	1	0:15	60%
	2	0:20	30%
	3	1:00	0%

Holding: Fridge at 4°C
储存: 4°C 冷藏

Cooking: Wrapped and regenerate in XpressChef™ 2c
烹调: 卷好后, 放入 XpressChef™ 2c 烤焗

CHINESE SANDWICH (Pre-cooked)
午餐肉夹馍 (已煮熟)

Food Temp. 食物温度: Bun 馒头 4°C, Luncheon meat 午餐肉 22°C
Accessories used 使用配件: Panini Grill Plate Smooth Side 坑烤盘平滑面

Regeneration program 回温程序

			MW
240°C	1	0:30	50%
	2	0:10	35%
	3	0:45	0%

Holding: Bun 4°C, Luncheon meat 22°C
储存: 馒头 4°C, 午餐肉 22°C

Cooking: Sliced separately and grill in XpressChef™ 2c
烹调: 分别切片后, 放入 XpressChef™ 2c 烤焗

BANANA COCO TOAST (Pre-cooked)
香蕉蜂蜜吐司 (已煮熟)

Food Temp. 食物温度: 22°C
Accessories used 使用配件: Panini Grill Plate Smooth Side 坑烤盘平滑面

Regeneration program 回温程序

			MW
240°C	1	1:00	10%
	2	1:00	0%

Holding: Room temperature
储存: 室温

Cooking: After modeling, regenerate in XpressChef™ 2c
烹调: 造型后, 放入 XpressChef™ 2c 烤焗

BANANA PIE (Pre-cooked)
香蕉面包派 (已煮熟)

Food Temp. 食物温度: 22°C
Accessories used 使用配件: Panini Grill Plate Smooth Side 坑烤盘平滑面

Regeneration program 回温程序

			MW
240°C	1	0:50	30%
	2	0:30	10%
	3	1:00	0%

Holding: Room temperature
储存: 室温

Cooking: After modeling, regenerate in XpressChef™ 2c
烹调: 造型后, 放入 XpressChef™ 2c 烤焗

APPLICATIONS 多功能应用

XpressChef™ 2c Series HIGH SPEED COMBINATION OVEN 热风对流微波烤箱

The features of the JetwaveTM oven are designed to provide useful service to many food service establishments.
烤箱特色旨在为各式各样的饮食行业也能提供适合的服务

- Bakes 4-8 times faster than a convection oven
  比对流烤箱烘烤快4-8倍
- 100 programmable menu items, 4-stages cooking and 11 microwave power levels
  提供100个可编程菜单，4个阶段的烹饪和11个微波功率等级
- Flexible cooking platform, use any combination of microwave energy and convection to cook a large variety of items effortlessly.
  灵活的烹饪模式，可随意组合微波与对流的能量操作，适合多元化美食

QSR 快餐店

The XpressChef™ oven is able to reheat food in a very short time, thus cutting down the waiting time of the guest. The oven fresh function allows more choice of food being served through this oven.
烤箱能够迅速回温食品，大大缩减客户的等侯时间，全面善用烤箱功能，增加食品多元化选择。

Café 咖啡店

Food can be prepared in advance to save energy and time and be reinstated strategically using the XpressChef™ during the peak and slow period to offer prompt service
食品可预先制作备用，于日常营运或繁忙时段就可策略性地运作烤箱，以达致快速的服务指标。

Hotel 酒店

Many outlets in a hotel do not have food handling staff, the XpressChef™ oven is able to serve food in these outlets round the clock.
24小时营运的酒店餐饮场所，在某时段欠缺人手情况下，也可透过JetwaveTM 烤箱提供食品服务。

Pantry 备餐间

The XpressChef™ oven operates without exhaust, thus enabling area without extraction to operate and provide hot food service.
烤箱毋须排气，即使在没有排气的区域操作，也能提供热食服务。

Convenience Store 便利店

The oven fresh function of the XpressChef™ oven can expand the line of food in the store and the speed of the oven does not increase the waiting time.
烤箱内置可编程菜单功能，可增加回温食品的多元化及加快烹饪速度，减少客人轮候时间。

Bar & Pub 酒吧

Having food along with drinks is a habit of Asian while many bars and pubs do not have cooking facilities ; the XpressChef™ is preferred to provide a wide choice of food for going along with beers and other alcoholic drinks.
时下酒吧除了提供饮品外亦增加了食品服务，但许多酒吧都欠缺烹饪设施，XpressChef™ 烤箱此时就能提供广泛应用予以服务顾客，带来额外收益。

Country Club 乡村俱乐部

Packed during weekends and slow on weekdays is always a challenge to the club operators. The XpressChef™ can help to speed up service during weekends and provide quick service without kitchen staff on weekdays when business is slow.
俱乐部经营节奏比较轻松，但周末则应接不瑕! XpressChef™ 烤箱特别适用于客量培增的繁忙环境，另外在欠缺厨房工作人员驻守的日子里亦可透过烤箱提供食品服务。

Kiosk 小食亭

In the middle of a posh commercial building lobby, our XpressChef™ can serve hot food in the kiosk without polluting the air of the lobby.
在豪华商业大厦的大堂里，XpressChef™ 烤箱以不污染大堂空气的大前提下也可提供热腾腾的食品服务。

ACCESSORIES / CLEANING 配件 / 清洁

XpressChef™ 2c Series HIGH SPEED COMBINATION OVEN 热风对流微波烤箱

	DESCRIPTION 描述	ITEM 编号 #	DIMENSIONS 尺寸 (H x W x D)
	PIZZA STONE 底饼石 Aids in crisping and browning breads and pizzas 有助于面包和披萨的松脆和上色	ST10C	13 x 289 x 337 mm
	PANINI GRILL PLATE 坑烤盘 Provides distinctive grill marks (same as a panini grill) 提供独特的烧烤纹路（与帕尼尼烤炉相同效果）	JR10	5 x 318 x 310 mm
	OVEN PADDLE 烤箱铲 Helps remove food & cookware from oven (Compact PA10R stores under MRX oven with installed LG10 leg kit.) (purchased separately) 帮助从烤箱中取出食物和炊具, (PA10R 紧凑型) 可存放在已安装 LG10 支脚套件的MRX烤箱下 (另购)	PA10	64 x 508 x 302 mm
		PA10R	38 x 191 x 451 mm
	NON-STICK LINER KIT 不沾炉腔垫 Make cleanup easier and protect oven components. 使清理更容易并保护烤箱组件	TL12	sides, door, top 两侧, 门, 顶部
	OVEN RACK 烤箱支架 Stainless steel interior oven rack 不锈钢内部烤箱架	RA14	26 x 327 x 365 mm
	DRIP TRAY/ GRIDDLE 托盘/网格 Makes clean-up easier. Aids in crisping and browning. 使清理更加容易。有助烘脆及上色	DR10	30 x 314 x 347 mm
	MESH NON-STICK BASKETS 网状不粘篮子 Ideal cooking surface, makes cleanup easier · TB10, SB10: mesh bottom, 2EA 理想完美的烹饪表面，完美的烤焗食材效果, 清洁更容易 · TB10, SB10: 网状底部, 一套2件	TB10	25 x 257 x 305 mm
		SB10	22 x 152 x 308 mm

For DAILY CLEANING follow these simple steps:

1. Shut oven off. Press the Preheat On/Off pad. Allow oven to cool down to 200°F (95°C) or lower (approximately 10-15 mins with the door open and 45-60 mins with the door closed).
2. Remove rack and accessories. Wash with warm soapy water and allow to air dry while cleaning oven interior. Clean pizza stone by using a plastic scraper and a damp cloth only.
3. Spray oven interior. Remove baked on particles using a plastic scraper. Wear gloves and safety glasses. Spray oven door, sides and floor with Kay's Cleaner. Do NOT directly spray cleaner into perforation patterns on the back wall of the oven cavity. Allow to soak for 2-5 mins.
4. Clean and wipe oven interior. Clean the oven using a compsoite scouring pad. Wipe the oven interior using a damp clean towel, rinse towel and wring dry. Repeat 2-3 times to remove remaining oven cleaner and particles from the oven. If needed, repeat steps 3 and 4.
5. Sprsy oven shield. When oven is clean, spray cavity with QSR Heavy Duty Degreaser (QSR HDD) Oven Shield and wipe all interior surfaces. Place rack back in oven. Do not remove Oven Shield.
6. Clean oven exterior. Clean exterior door and other surfaces with clean cloth, sponge or composite pad and warm soapy water.

日常保养步骤：

1. 关掉烤箱：先按ON / OFF按钮关掉烤箱，等待烤箱降温至95°C或以下 (如打开烤箱门，需要10-15分钟，如关上烤箱门则需时45-60分钟)。
2. 取出炉内所有配件，如烤架，饼底石及底盘等配件，用中性肥皂暖水进行清洁。用塑料刮板及湿布刮清洁饼底石。
3. 喷洒烤箱内部：配戴橡胶手套和护目镜。使用Kay的清洁剂喷洒箱门，两侧和炉腔底板。避免直接喷向炉腔后部气孔板。让清洁剂浸泡2-5分钟。
4. 清洁烤箱内部：使用塑料百洁布及清水清洁烤箱门和炉腔及抹干，重复2-3次直至炉腔所有清洁剂及残留物都清除如有需要，请重复步骤3及4 。
5. 喷上烤箱防护剂：当烤箱清洁后，在炉腔表面喷上一层薄薄的QSR专用去油剂 (QSR HDD)。放回烤架等配件。不要擦去烤箱防护剂。
6. 烤箱外壳：用沾有中肥肥皂暖水的湿毛巾，海绵或塑料百洁布擦拭烤箱外壳。

Weekly Cleaning: Clean Air Filter or Drip Tray

Filter and drip tray are located below oven door. Filter is magnetic, remove filter for cleaning and wipe surrounding louvers. Wash filter using a sponge or composite pad and warm soapy water. Pull drip tray out and clean using a sponge or composite pad and warm soapy water. Rinse and dry thoroughly.

每周清洁： 清洁空气过滤网及底盘

带有磁性的过滤网设计易于取出，请于取出烤箱底部的过滤网及底盘后，以海绵或塑料百洁布以中性肥皂配温水清洗，最后用清水彻底洗净并风干。

Recommended Cleaning Supplies:

- Damp towel · Plastic scouring pad · Kay's Cleaner and QSR Heavy Duty Degreaser (QSR HDD). Avoid spraying caustic cleaners or those containing ammonia, phosphates, chlorine, sodium or potassium hydroxide (lye) directly on surfaces.
- Remove food from oven at end of cycle.
- Wear protective rubber gloves when cleaning oven.
- Remove baked on particles using a plastic scraper.
- Avoid spraying caustic cleaners or those containing ammonia, phosphates, chlorine, sodium or potassium hydroxide (lye) directly on oven.
- Use only accessories that are both high temperature oven-safe in the oven.
- DO NOT use a water-pressure type cleaning system.
- DO NOT cook foods contained in plastic wrap.
- DO NOT use metal foil in the oven. You may use drip tray accessory (DR10) to line oven.
- Metal pans with no more than 1 inch deep are acceptable. Assure pans do not contact oven or door surfaces during cooking.

推荐清洁用品：

- 湿毛巾 · 塑料百洁布 · Kay's 清洁剂和 ACP烤箱防护剂。避免使用含有苛性碱、氨磷酸盐、氯及氢氧化钠或氢氧化钾(碱液)等的清洁产品直接接触烤箱表面。
- 从烤箱中取出所有食物。
- 清洁烤箱的时候戴上防护的橡胶手套。
- 用塑料刮板刮除残留的颗粒。
- 避免在烤箱表面喷洒苛性清洁剂或含有氨、磷酸盐、氯及氢氧化钠或氢氧化钾。
- 只可使用耐高温之配件。
- 切勿使用水压式清洗系统。
- 切勿使用含塑料包装食品。
- 切勿使用含金属箔片的烤盘，但可以使用烤盘 (DR10)。
- 可使用不超过1英寸深的金属平底锅。
- (但要注意在烹饪过程中金属平底锅不能直接接触烤箱)

WARNING警告

Please note that the use of caustic cleaning products or those containing ammonia, phosphates, chlorine, sodium or potassium hydroxide (lye) can damage critical oven parts. Do not use water pressure type cleaning systems. Use of unapproved cleaning agents will void the terms of the warranty. Recmmended Cleaning Supplies: damp towel, plastic scouring pad, Kay's Cleaner and QSR Heavy Duty Degreaser Shield Oven Protectant.

请注意，使用苛性碱的清洁产品或含有氨，磷酸盐，氯，氢氧化钠或氢氧化钾 (碱液) 会损坏烘箱组件。不要使用水压式清洗系统。使用未经批准的清洁剂 推荐清洁用品：湿毛巾，塑料百洁布，Kay's清洁剂和QSR专用去油剂 (QSR HDD)。

XpressChef™ 2c Series 系列

HIGH SPEED COMBINATION OVEN 热风对流微波烤箱

front view 正视

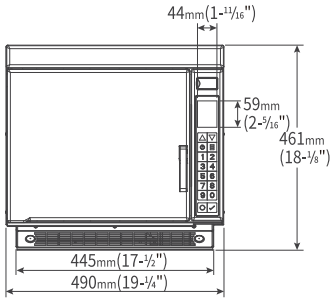

side view 侧视

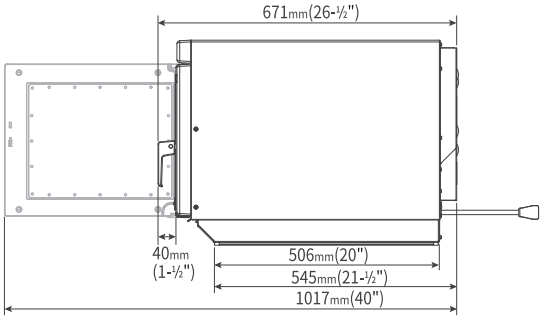

back view 后视

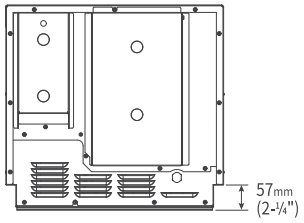

Drawings available from KCL CADlog - techs@kclcad.com

Dimensions 尺寸			
Exterior 外尺寸	H 461 (18 1/8")	W 490 (19 1/4")	D †671 (26 1/2")
Cavity 内部尺寸	H 267 (10 1/2")	W 330 (13")	D 381 (15")
Capacity 容量	34 liter (1.2 cubic ft.)		
Door Depth 炉门深度	1017 (40"), 90°+ door open		
Installation Clearance 安装间隙	Top: 102 (4")	Sides: 25 (1")	Back: None
Shipping Carton	H 546 (21 1/2")	W 540 (21 1/4")	D 756 (29 3/4")

Weight 重量		
Model Type 型号类别	Product Weight 产品重量	Ship weight (approx.) 装运重量
With catalytic converter 带触媒转化器	51 kg. (112 lbs)	53 kg. (116 lbs)
Without catalytic converter 不带触媒转化器	50 kg. (111 lbs)	52 kg. (115 lbs)

ACP, Inc. requires installing a type D circuit breaker for all high-speed oven installations.
ACP, Inc. 要求为所有高速烤箱安装 D 型断路器

Measurements are millimeters. Measurements in ( ) are US Standard
测量单位为毫米。( ) 中的测量值是美国标准

* IEC 60705 Tested
* IEC 60705 测试标准

*** Removable magnetic air filter accessory available (#AF10)*
*** 选配可拆卸磁性空气过滤器配件 (#AF10)*

† Includes handle
† 包含把手

‡ Catalytic covertor filters grease and odors from the air. This product conforms to the Ventless Operation
‡ 触媒转化器过滤空气中的油脂和异味。本产品符合无排气口操作

Recommendations set forth by NFPA96 using EPA202 test method
NFPA96 使用 EPA202 测试方法提出的建议

Features 特征	
Configuration 配置	Countertop 台面
Stackable 可叠放	Yes, without kit 可以, 不需套件
Display 显示屏	71mm (2.8") Color 彩色 LCD
USB Port 接口	Yes 配有
Internet Connectivity 网络连接	No 不带
Control System 控制系统	Touchpad 触摸式
Programmable Control 设定控制键	Yes, 10 pads 有, 10个
Braille 凸点符号文字	Overlay available 可叠加
Settings Programmable 设置编程	100
Temperature Range 温度范围	95°– 250°C (200°– 475°F)
Microwave Distribution 微波分布	Rotating antennas, top 顶部旋转天线
Power Levels 火力大小级数	11
Defrost 解冻	Yes, microwave only, power level 2 配有, 只限微波, 2档
Time Entry Option 时间输入选项	Yes 配有
Stage Cooking 分段烹调	Yes, 4 stages 配有, 4段
Air Filter 空气滤网	Non-removable with cleaning reminder** 不可拆卸,并附有清洁过滤器提醒功能**
Rack 托架	2 positions, 1 removable rack 2个托架位置, 1个可卸除
Door Handle 门把手	Lift & Pull 提起把手向后拉
Exterior Finish 外壳材质	Stainless steel 不锈钢
Interior Finish 内胆材质	Stainless steel 不锈钢

Electrical Configuration 电力配置

Region 地区	Model# / UPC 型号 / 代碼	Auto. Voltage Sensor 自动电压传感器	Max. Cooking Time 最长烹饪时间	Catalytic Converter 触媒转化器	Power Consumption 能量消耗	Power Output 功率输出 Microwave* 微波*	Power Output 功率输出 Convection 对流	Power Source 电源	Plug Configuration 插头配置		Cord Length 电线长度	Frequency 频率	Magnetron 磁控管
HK, Asia 香港, 亚洲 single phase 单相	JET514 728028244731	No	20:00	No	2900W, 13A	1400W*	2700W	230-240V, 50Hz, 16A, single phase 单相	CEE 7/7 "Schuko"		1.5m (5 ft.)	2450MHz	2
HK, Asia 香港, 亚洲 single phase 单相	JET514V 728028244748	No	20:00	Yes ‡	2900W, 13A	1400W*	2700W	230-240V, 50Hz, 16A, single phase 单相	CEE 7/7 "Schuko"		1.5m (5 ft.)	2450MHz	2
China 中国 single phase 单相	JET514C 728028244786	No	20:00	No	2900W, 13A	1400W*	2700W	220V, 50Hz, 16A, single phase 单相	China 3-Pin Angle type		1.5m (5 ft.)	2450MHz	2
China 中国 single phase 单相	JET514VC 728028423020	No	20:00	Yes ‡	2900W, 13A	1400W*	2700W	220V, 50Hz, 16A, single phase 单相	China 3-Pin Angle type		1.5m (5 ft.)	2450MHz	2
Philippines 菲律宾 single phase 单相	JET14 728028244656	YES	20:00	No	3200 W, 16A	1400W*	2700W	208/240V, 60Hz, 20A, single phase 单相	NEMA 6-20		1.5m (5 ft.)	2450MHz	2
Taiwan, Philippines 台湾, 菲律宾 three phase 三相	JET14VT 728028422931	No	20:00	Yes ‡	3300 W, 16A	1400W*	2700W	380V, 60Hz, 16A, 3 phase 三相	Direct Wire		1.5m (5 ft.)	2450MHz	2

225 49th Ave. Dr. SW, Cedar Rapids, IA 52404 U.S.A.
800-233-2366 • 319-368-8120 • Fax: 319-368-8198
www.acpsolutions.com

Updated 07/28/2021

© 2021 ACP, Inc., Cedar Rapids, Iowa 52404

an Ali Group Company
The Spirit of Excellence